9801A

Category: Bathroom Sink
Material: Stainless Steel
Dimensions:
21.2″(L) x 16.5″(W) x 4.3″(H)
Hole Size: Ø45
Overflow: No

Colors:

Brushed Gold | Brushed Rose Gold | Brushed Silver | Gun Metal

Technical Data

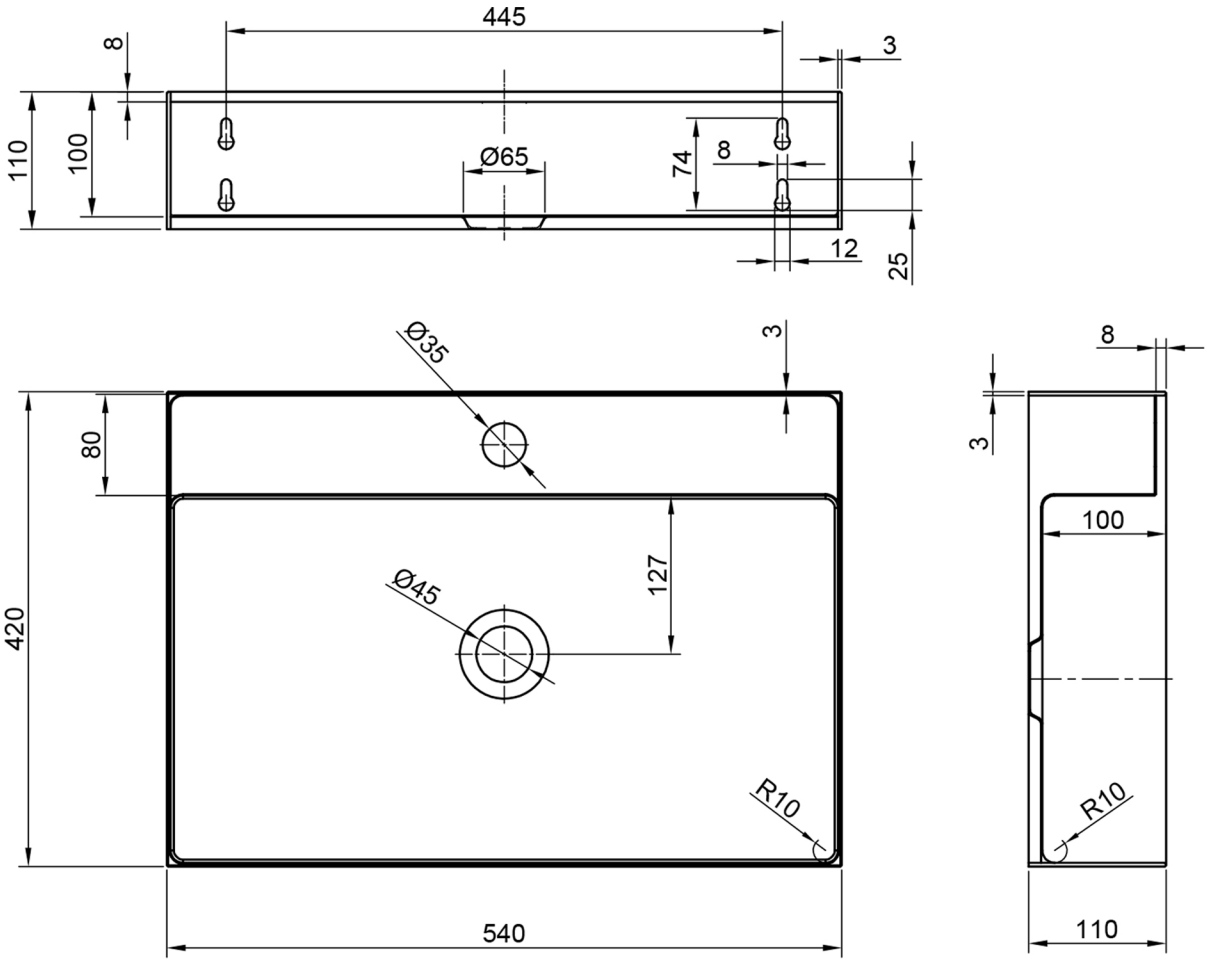

*Numbers are in millimeters

Copyright © MaestroBath / All rights reserved