FAU-CYR-BCR

Category: Bathroom Faucet
Material: Lead-Free Brass
Dimensions: 3.1″(L) x 3.1″(W) x 7.4″(H)

Description: Luxury bathroom faucet in brushed chrome finish.

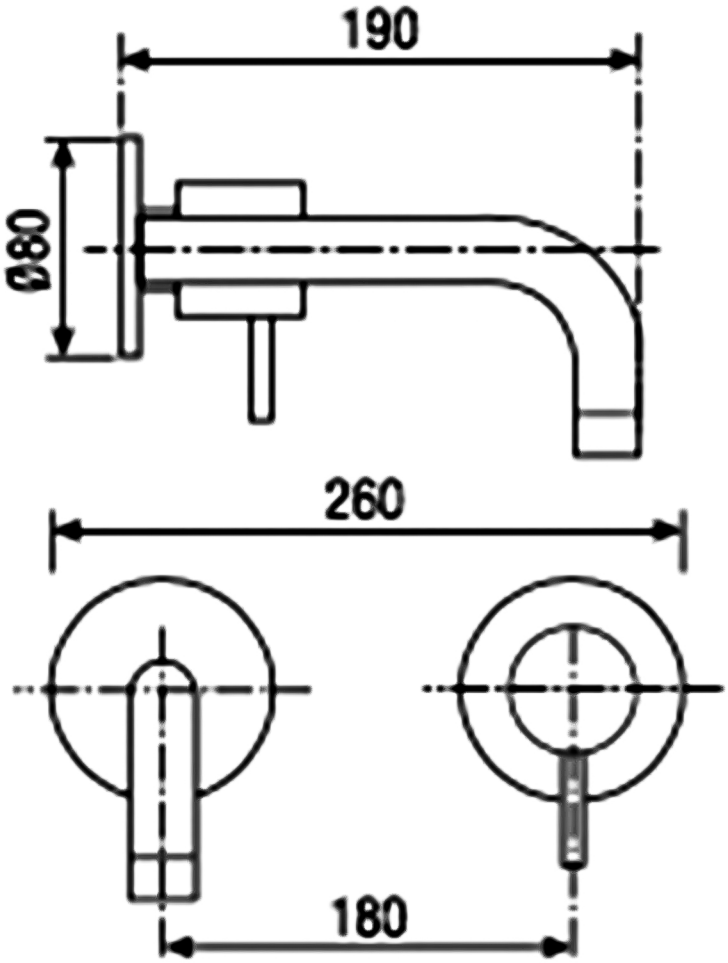

*Numbers are in millimeter

Copyright © MaestroBath / All rights reserved