LUNA

Category: Bathroom Faucet
Material: Lead-Free Brass
Type: 3-Hole Wall-Mount Mixer
Spout Reach: 7.48″
Overall Length: 7.95″
Overall Width: 10.24″
Handle Centers: 7.87″
Wall Plate: Ø2.83″
Rough-in Valve: Not Included



Technical Data

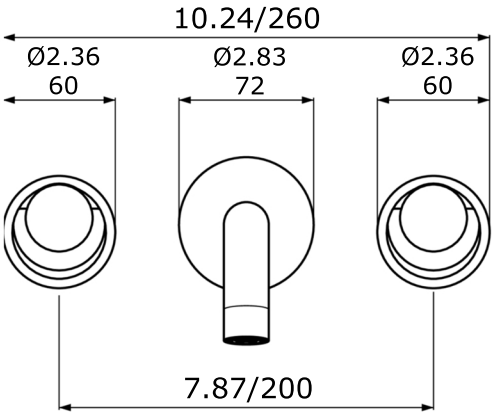

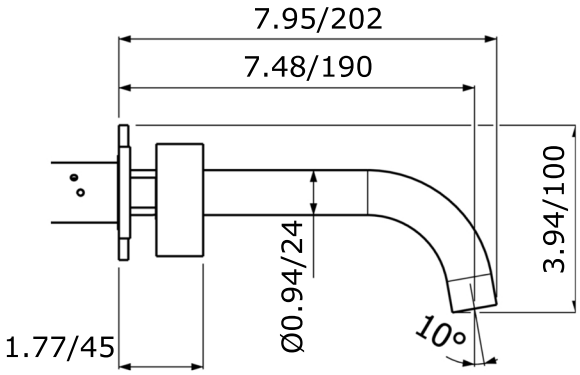

*Numbers are in inches/millimeters

Copyright © MaestroBath / All rights reserved

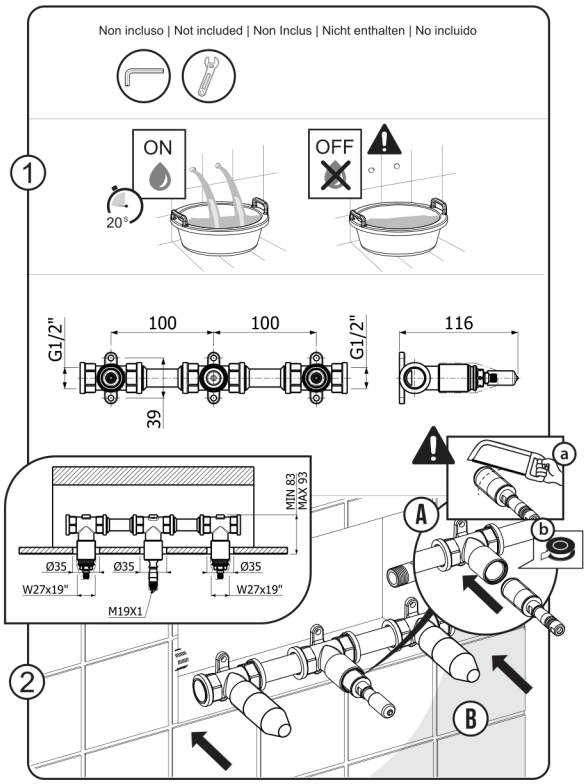

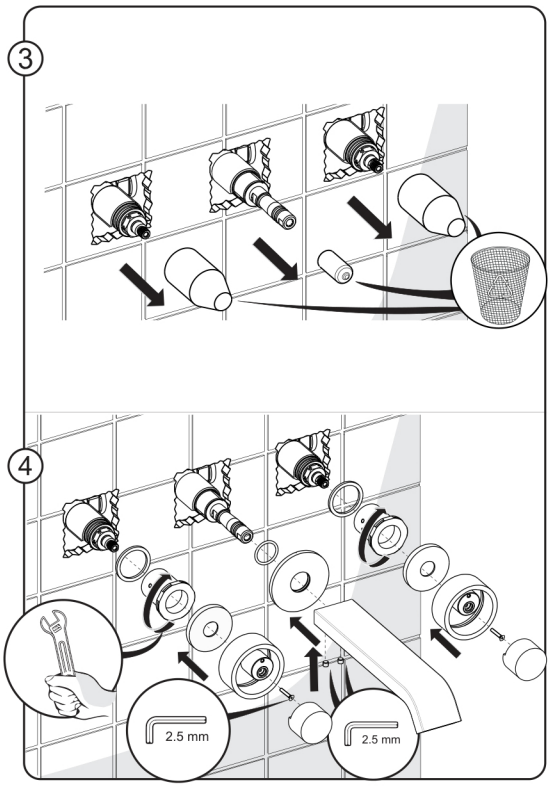

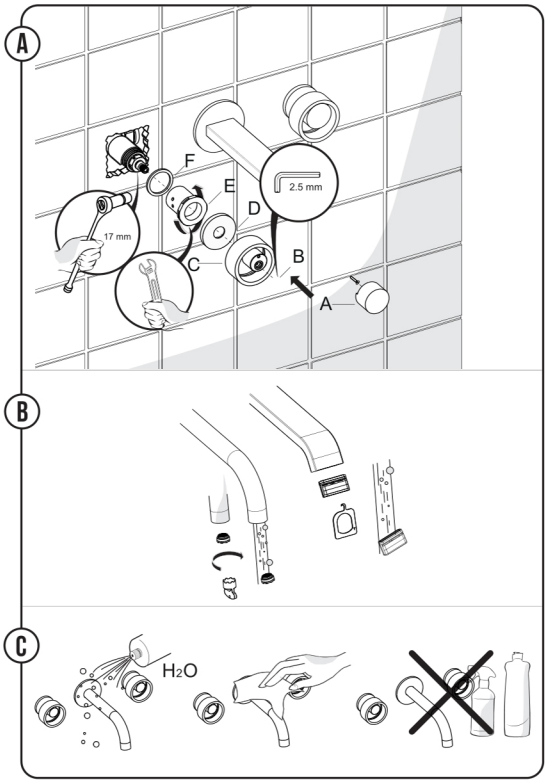



Copyright © MaestroBath / All rights reserved